BODY, CENTER CONSOLE - Z26NMY99A4/B4/A6/B6 (C0705025-1)

2026 RZR - RZR XP S 4 1000 ULTIMATE (R01) - Z26NMY99A4/B4/A6/B6

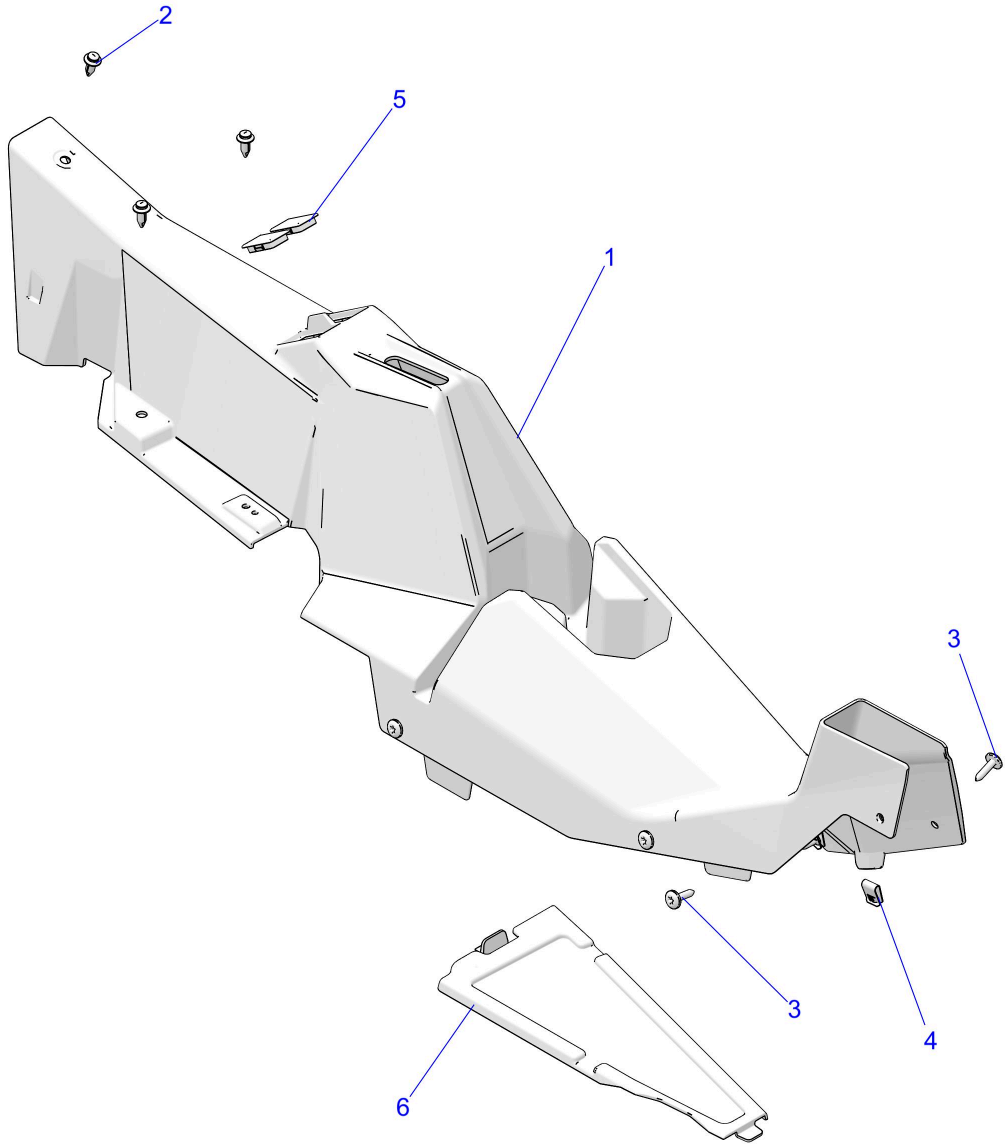

© 2021 Polaris Industries Inc. C0705025-1

Reference #	*Part#*	*Description*	*Quantity*
1	5456552-070	CONSOLE-CENTER,BLK	1
2	7661855	RIVET-TUFLOK,.315-.325X.787	3
3	7519650	SCR-TXTH-M6X1.0X25 ZFB	AR
4	7547674	NUT-M6-1.0, U-TYPE (2.5-3.8)	AR
5	5453402	COVER-SWITCH,RZT	2
6	5457344-070	COVER,TUNNEL CLOSEOUT,BLK	1

Copyright 1996-2026 Polaris Industries U.S.A All rights reserved.